COPYRIGHT INFORMATION

REVISIONS

REV.	DESCRIPTION	DATE	APPROVED

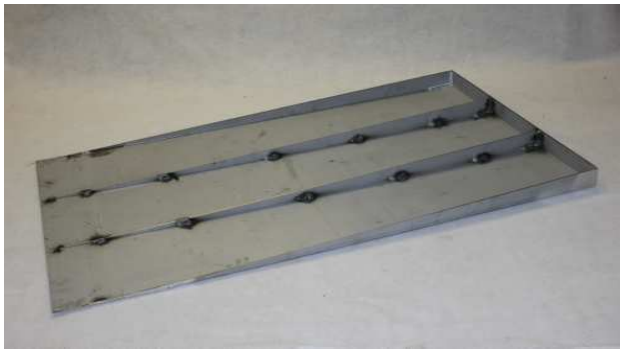

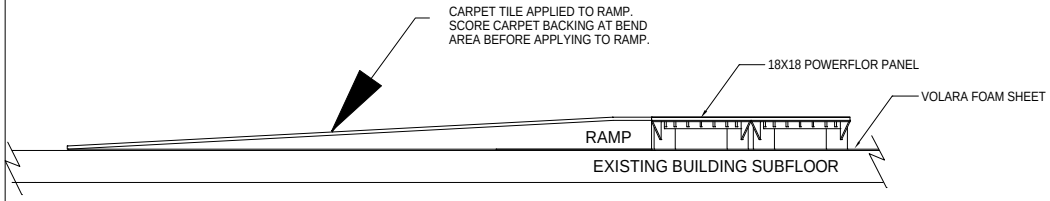

TYPICAL RAMP INSTALLATION

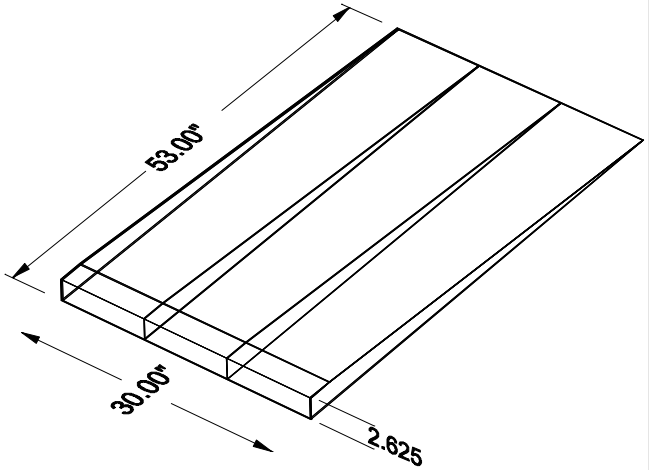

ADA HANDICAP RAMP

1. 11 GAUGE STEEL WELDED CONSTRUCTION WITH GUSSETS.
2. STANDARD RISE 1:20.
3. MEETS ALL ADA REQUIREMENTS.
4. WIDTH VARIES TO MEET SITE REQUIREMENTS

.

CUSTOM PRODUCTS & SERVICES
6286 Claude Way E, Inver Grove Heights, MN 55076-4435
PH: 888-444-1202 (Toll Free) or 651-452-0113 Fax: 651-452-2264
E-mail: Info@custom-products.com
Website: www.custom-products.com

PARTS LIST

NEXT ASSY.	USED ON

APPLICATION

UNLESS OTHERWISE SPECIFIED DIMENSIONS ARE IN INCHES. TOLERANCES ARE:
FRACTIONS ± DECIMALS .XX ± .XX .XXX ± .XXX ANGLES ± 1
MATERIAL
FINISH

CAD GENERATED DRAWING DO NOT UPDATE MANUALLY

APPROVALS	DATE
DRAWN J.R.ECKHART	02/01/2016
CHECKED	

ADA RAMP 1/20 SLOPE

POWERFLOR USA, INCORPORATED
CABLE MANAGEMENT SYSTEMS

SIZE C DRAWING NO. 3-205330 REV.
SCALE: XX.X CAD FILE XXXX.XXX SHEET XX OF X